Skunk Works Robotics Team 1983: Robot Design Documentation

2017 Design and Build Team

February 2, 2018

Abstract

This year Skunk Works Robotics Team 1983 assembled a robot to address the 2017 game FIRST Steamworks. The design team went through four main stages: strategy, rapid prototyping, design, and assembly. By coordinating multiple small groups to design and integrate mechanisms for each aspect of FIRST Steamworks, the team completed a robot that could score 120 points on average, with an average of 3 gears per match, a climber with 100% accuracy, and an effective fuel tiebreaker, addressing every game element.

Not only was the robot design process more organized with a master robot geometry sketch and the drive base easier to service with a new west coast design, but the robot was also a huge challenge because of its turret shooter. The turret sought to address the problem of both score caps and ties because of the rigid scoring of the other game tasks while allowing the robot to complete fuel autos from multiple locations on the field. The team had never built a turret shooter before, meaning that there was little prior experience compared to that for other parts of the robot. There were issues with motor burnouts and the turret's swing radius, but changes in the design allowed the robot to improve in performance over the course of the season. Thus, the design process for FIRST Steamworks both improved on past design practices and added to a previously untouched category in collective team knowledge.

Contents

1 Introduction **3**

2 Strategy **3**

3 Prototyping **3**
3.1 Gear Collection and Placement . . . 3
3.1.1 Tilted Slot . . . 4
3.1.2 Gear Box . . . 4
3.2 Fuel Collector . . . 9
3.3 Indexer/Hopper . . . 10
3.4 Shooter . . . 11
3.5 Climber . . . 11
3.5.1 Velcro Drum . . . 12
3.5.2 Double and Triple Wheel . . . 12
3.5.3 Drum Cutout . . . 13
3.5.4 Butterfly . . . 13
3.5.5 Bolt Climber . . . 14
3.5.6 Water Jet Hooks . . . 14

4 Design **15**
4.1 Subteam Organization . . . 15
4.2 Master Robot Geometry . . . 15
4.3 Drive Base . . . 16
4.4 Gear Collection and Placement . . . 17
4.5 Fuel Collector . . . 20
4.6 Hopper . . . 21
4.7 Indexer . . . 21
4.8 Shooter . . . 21
4.9 Climber . . . 22

5 Assembly **23**
5.1 Drive Base . . . 23
5.2 Gear Collection and Placement . . . 24
5.3 Fuel Collector . . . 24
5.4 Indexer . . . 25
5.5 Shooter . . . 25
5.6 Climber . . . 25

6 Performance **25**
6.1 Drive Base . . . 25
6.2 Gear Collection and Placement . . . 26
6.3 Fuel Collector . . . 26
6.4 Hopper . . . 26
6.5 Shooter . . . 26
6.6 Climber . . . 27

1 Introduction

In 2017, FIRST introduced the game FIRST Steamworks. There are three main objectives in Steamworks: to shoot "fuel" into the "boiler," to load gears onto the "airship," and to climb a rope. One of the largest challenges is robot alignment. Not only do the drivers have to align with the lift, retrieval zone, boiler, and rope, but they also have to line up while two airships obscure their view. This means that all of the mechanisms must allow for some driver error. Additionally, both gear- and fuel-based robots must make many cycles across the field to collect game pieces, making a fast drive base advantageous. A strong drive base is also helpful because the locations of the airships in the center of the field create specific, easily defensible routes, increasing robot-on-robot contact.

2 Strategy

Directly after kickoff, the team began to analyze the game, looking for the most effective playing strategy, both as an alliance member and as an individual team. The most points come from collecting gears, but there is a point limit. This is the same with climbing. Thus, when looking at a championship game, these capabilities likely will not be the differentiator between who wins and loses. Conversely, fuel does not have a score limit, making it an important factor in the game in spite of its low point values. However, a shooter robot would not be able to get the same amount of points as a gear robot. Therefore, while the team determined that handling the gear and climbing are essential to scoring enough points to win a game, a shooter built as a third priority system could help the robot avoid the score cap. This idea was confirmed at the Auburn Mountainview district event, where many teams tied with a score of 305, so just one kPa in the boiler could be the difference between a win and a loss.

3 Prototyping

After the strategy phase, the team begins to transition into developing initial mechanism concepts. In order to determine which ideas will be most effective, each year the team undergoes a rapid-prototyping phase. The entire team is split into groups, and each group prototypes multiple different ideas and then presents the results to the rest of the team. From there, the team selects the most efficient and effective prototypes for the formal design process. The following sections detail the various prototypes that were made in order to come up with the final robot concept.

3.1 Gear Collection and Placement

The gear collector would have to be able to accurately acquire a gear from the gear distribution zone, and place it onto a spring thirteen inches off the ground. Initially it was unclear whether it was necessary to have the ability to place the gear on its own, or if it could rely on the human player to take the gear out of the device. The team hypothesized that good human players would be able to lift the gear out with sufficient speed. It also seemed highly unlikely that three robots would be at the airship at once, so supposedly they would always

be open to pull out the gear, rendering an active gear placement mechanism unnecessary. Thus, there were two different designs for a passive, pilot-reliant gear collector.

3.1.1 Tilted Slot

The first idea was a self-aligning, passive gear slot, which would allow the gear to slide into the collector and index against two pieces of spring steel, centering it. To unload, the spring would begin under the gear, and, as it was lifted, the spring steel would push the gear toward the base of the spring, decreasing the chances of losing a gear on the lift. This design was attractive because it was completely passive, but it would take up a lot of horizontal space required for the turret and the hopper. For this reason, this mechanism was eliminated in favor of a design that would be more efficient on space.

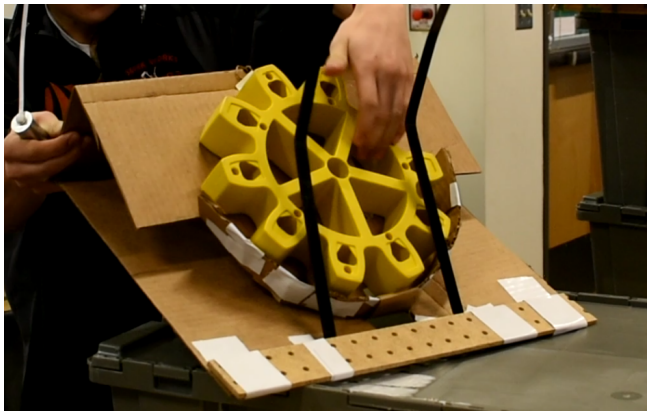

Figure 1: Bent spring steel both holds the gear in the slot and orients it vertically as it rises.

3.1.2 Gear Box

The second prototype was a box that would catch the gear as it hit a tall back plate. There were slanted sides on the inside of the box that would index the gear into the middle, where there was a hole cutout for the spring. It left more space for the turret and ball collector, although the gear would possibly miss the collector because there was only a $2\frac{9}{16}$-inch gap between the front and back plates.

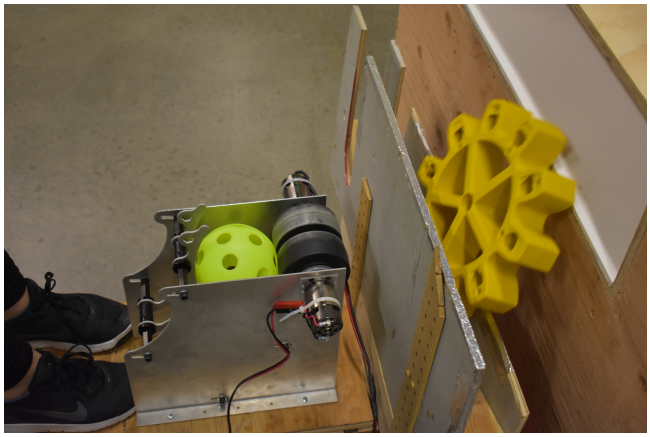

Figure 2: The original gear box prototype was entirely passive, simply catching the gear as it fell out of the retrieval station.

Furthermore, the gear does not fall into the collector in the same orientation every time, so there was a possibility that the spring would not always go through a hole in the gear, but hit a spoke instead. This was a concern because it was necessary to have as much control and consistency as possible in order to perform reliably at competition. One possible solution was a mechanism in the bottom of the gear folder in the shape of three gear teeth, with the purpose of turning the gear into place. A beam sensor located directly underneath the gear's center would determine if the gear needed to be rotated. If the beam was broken, the gear had the correct orientation because then there would be a hole directly above the gear's center, where the spring would hit the gear.

Figure 3: The bottom three pegs would turn from side to side to align the gear holes with the spring.

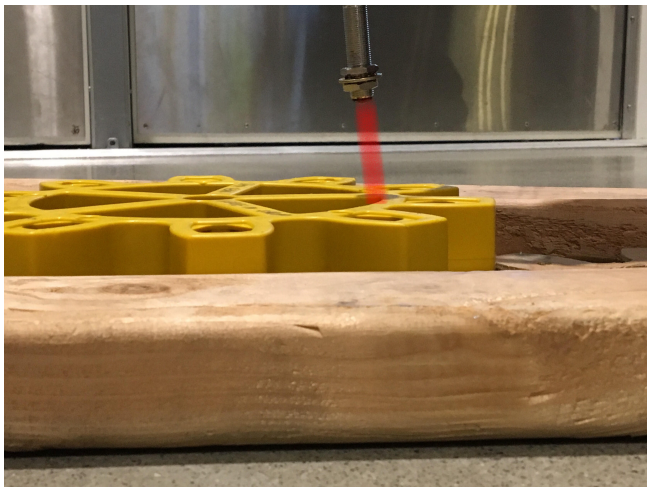

Figure 4: When the beam was shining through the hole in the gear, it would tell the driver the gear was not in position. When beam was obstructed by gear, it would tell the driver the gear was in position.

However, there was not enough space for the extra mechanism at the bottom of the folder. In order to fit the assembly, the gear would be higher than 13 inches off the ground, which is a problem for aligning the gear onto the spring. Adding a single tooth to the inside could have ensured the gear would land correctly every time, but upon further analysis of the gear placement and spring movement, the consensus was that the spring would actually pop into place if hit with a hard enough force, making it unnecessary to have a mechanism to turn the gear into place.

This led to a new prototype of the gear folder with flaps. At first, there had been flaps coming off five inches from the top of the front plate that would extend out to the wall of the retrieval zone. The gear would fall onto the flaps, and the flaps would then raise up and make the gear fall into the box. However, the middle hole for the gear holder was too large, and, when the gear fell in, it would sometimes fall into the hole for the spring.

Figure 5: The cardboard on the front of the gear box was bent to create flaps that could extend to the retrieval zone wall.

In order to fix this problem, the hole size decreased. Additionally, the design was modified so that the entire front plate would function as a flap, not just small pieces on the top. This allowed it to extend further out and have better structural integrity. The front of the folder would come out when the gear drops into the mechanism, and then come back up when the gear had been acquired. This is done by using cams to push the front flap forward and springs to pull it back into place. Servos are attached to a cam on either side to complete the movement of the gear flap. There would be plates on the inside of the gear folder that would index the gear to the center of the gearbox, where the spring could then go into the hole of the gear and lift it out.

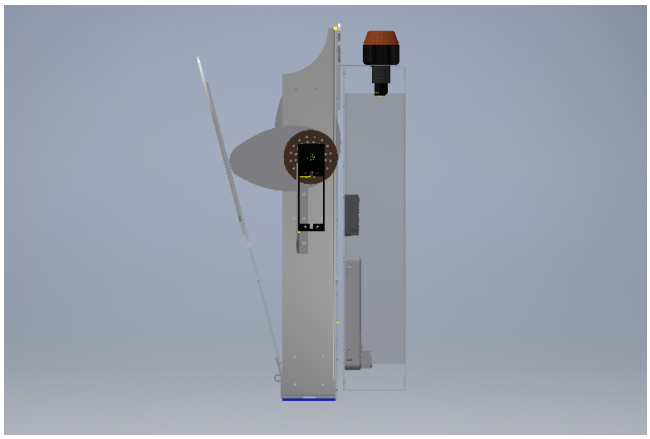

Figure 6: Instead of having short flaps only at the top of the gear folder as in Figure 5, the entire front plate could extend out.

3.2 Fuel Collector

Only one collector prototype was created, focusing on how to get the balls into the hopper. It included a wheel on the front, which transferred it into a vertical conveyor that moved the fuel with polyurethane belting. This prototype was prone to jamming, and it would take up too much space on the robot, so instead of the balls coming in from the top of the hopper it was decided to have the balls come from the bottom of the hopper, simplifying the design and increasing space for the hopper. A bottom feed would also agitate the fuel in the hopper, whereas a top feed would have allowed the fuel to just fall on top of the other fuel without pushing that fuel towards the indexer. These overall geometry decisions were made using the master robot geometry sketch.

The final fuel collector was designed to extend through a gap in the bumpers. By collecting fuel outside of the robot, the walls of the drive base did not block fuel on the outer edges of the collector, increasing the effective collector width from $11\frac{1}{2}$ inches to a full 16 inches. The collector was one of the most modular parts on the robot because it was designed around other parts on the robot. The system includes two Vexpro 775 motors attached via the VersaPlanetary gear box. Two $\frac{1}{4}$-inch aluminum plates hold the collector together, while also attaching to the frame of the drive train. By removing just eight rivets the collector can be taken off to have maintenance or to be replaced. The polyurethane tubing used on the Skunk Works Lunacy robot was picked to be used on this year's collector because it was easiest to use, readily accessible, and would allow the robot to have constant contact with the ball through the entire system.

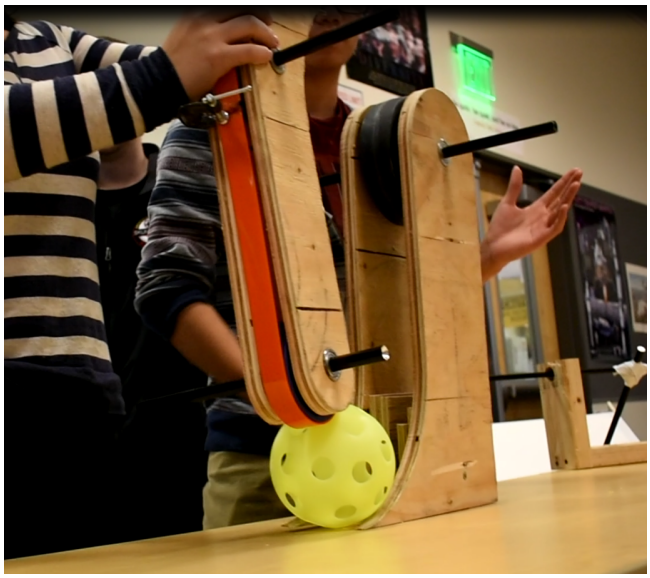

Figure 7: The collector prototype collected the fuel and indexed it into the vertical conveyor belt using a wheel on the front.

3.3 Indexer/Hopper

The initial indexer/hopper prototype was an Archimedes that loaded fuel into the shooter. While the Archimedes screw was a rather effective design in terms of having complete control over the balls, the design was impractical for several reasons. First, due to the small size constraints forced upon the robot, it was determined that based on given Key Performance Parameters (KPPs) and other design discussions, it would not be logical to have such a large indexer/hopper, as it would take up space for the gear collector and climber, which were the first and second priorities. Thus, it was replaced by a simpler hopper with conveyor belts on the floor.

Figure 8: The hopper was a large box, with ramps on the floor leading to a center conveyor belt that pushed balls to the indexer.

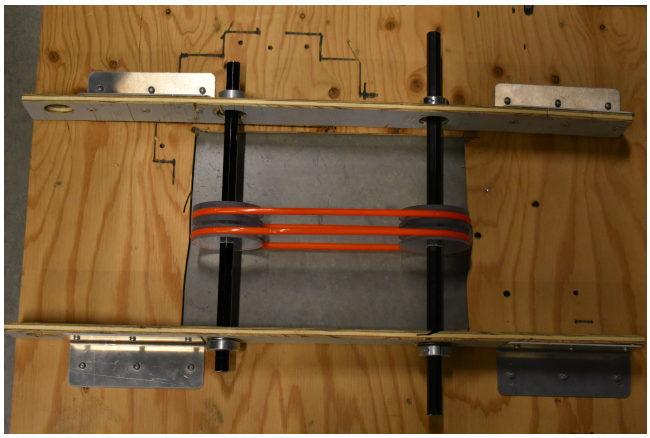

Figure 9: The conveyor belt used polycarbonate pulleys and polyurethane tubing.

3.4 Shooter

One of the largest shooter considerations was having the ability to shoot from different angles in the field. This would enable the robot to shoot from multiple spots, including from the airship lifts, and to make more points per cycle. Not many teams have this capability, which gives the robot an advantage in shooting and time efficiency. To do this, a turret shooter mounted on a lazy Susan attachment would be most efficient because it would be able to turn the shooter portion of the mechanism in the desired direction to fire fuel.

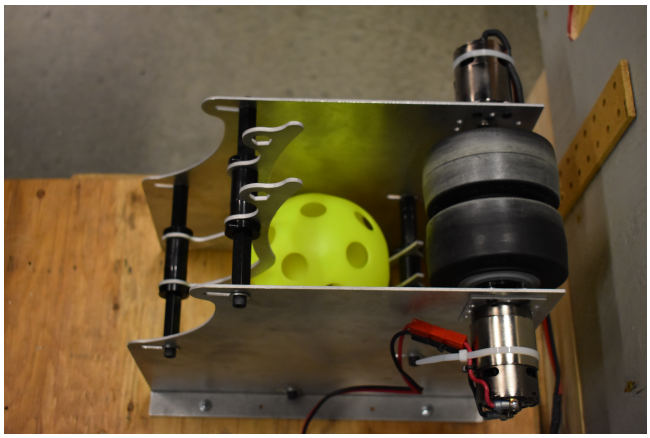

Figure 10: A fixed shooter prototype tested the shape of the guide rails and the flywheel, the idea being that in the design phase it would be fairly simple to convert the fixed shooter into a turret.

3.5 Climber

The team built multiple climber prototypes. All of the ideas were small, so space was not a concern. However, it was essential to determine the best way

to acquire the rope and support the weight of the robot. Below are in depth descriptions of each.

3.5.1 Velcro Drum

The first iteration of the climber was a Velcro-covered drum supported by a horizontal U-shaped mount. In the game, the Velcro would catch a frayed rope and pull it around the drum three times before climbing, giving securing the rope to the Velcro securely enough to climb.

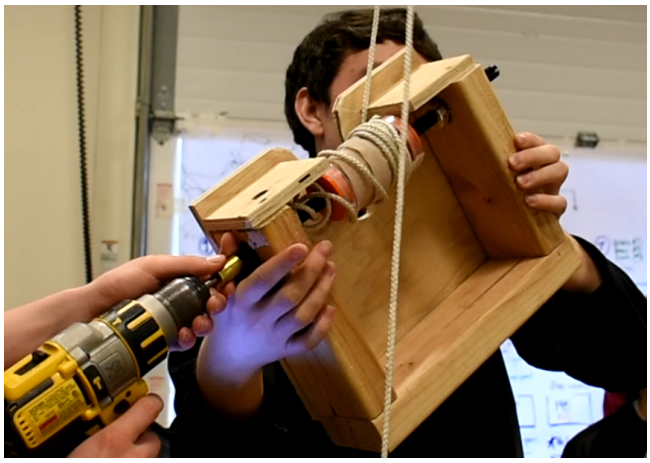

Figure 11: Velcro on the drum sticks to the rope. When turned, it lifts up the robot. The prototype was demonstrated by using a drill.

The prototype was successful in grabbing the rope and pulling itself up. The mount was able to support more than 120 pounds, or the maximum weight of the robot. However, after many tests and demonstrations, the Velcro began to weaken and compromise the climbing ability. The prototyping group came to the conclusion that this design could work, but the Velcro on the drum would need to be changed periodically. Thus, the reduced reliability removed this design from consideration.

3.5.2 Double and Triple Wheel

The second iteration of the climber was the utilization of two rubber wheels that would snap onto the rope using rubber bands. This design had a hard time catching onto the rope, and where it would catch it relative to the mount was inconsistent. It also was unreliable in keeping tension on the rope, so the rope tended to slip between the wheels.

In order to fix the problem of the rope slipping between the wheels in the double wheel design, the prototyping group added a third wheel so as to keep tension on multiple inches of rope at any given moment.

The wheels were successful in providing more tension on the rope and were able to support the full 120 pounds. The main issue was the problem of capturing the rope in the right place in order to start collecting the rope. Both the

double wheel and triple wheel concepts were ultimately scrapped because of the sheer difficulty of design and the strain on drivers to position the rope correctly.

3.5.3 Drum Cutout

The fourth edition of the climber used a piece of PVC pipe with a triangular cut out to capture a knot in the rope. Even under perfect conditions, this climber was not consistent in capturing the knot, causing the prototype to be scrapped.

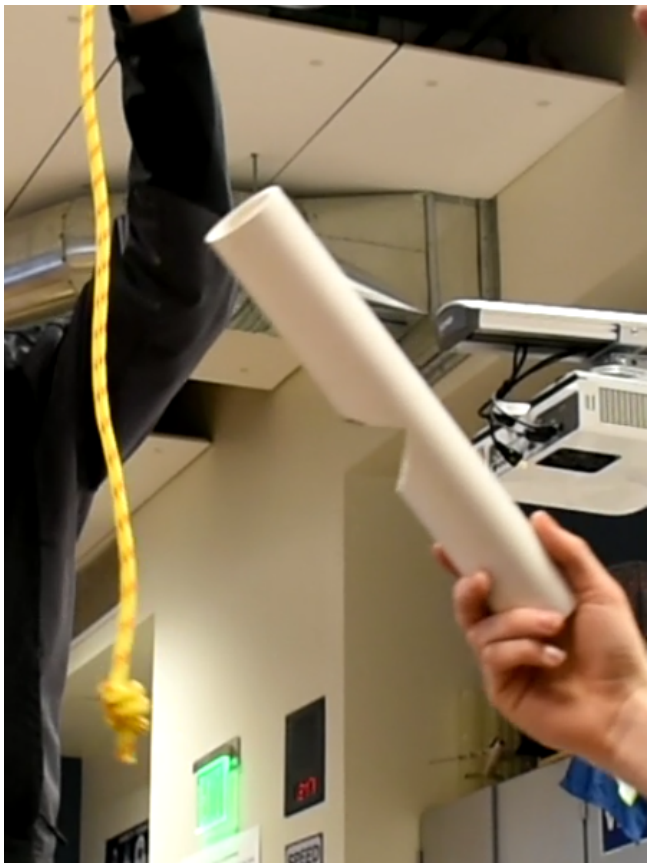

Figure 12: The PVC pipe had a triangular cutout designed to catch the knot on the rope.

3.5.4 Butterfly

The fifth iteration of the climber was a remake of the drum cutout with a piece of wood that extended four inches past the end of the drum instead of a cutout to center the rope. There was a slot in the middle of the centering mechanism that could grab onto a knot.

It was very successful in centering and climbing the rope. However, it took up more space in the robot than was available.

Figure 13: The drum cutout-climber was redesigned with butterfly sides.

3.5.5 Bolt Climber

The sixth iteration of the climber was a piece of $\frac{1}{2}$-inch hex shaft with $1\frac{1}{2}$-inch bolts attached via shaft collars. This climber would capture either a frayed or looped rope, allowing for easy capture from the front. As the climber was tested, it was discovered that as long as one of the bolts made contact with the fray in the rope, the climber would grip the rope. This was the most effective climber yet, so the same concept was used to create the final prototype.

3.5.6 Water Jet Hooks

The seventh iteration of the climber was a more polished prototype of the bolt climber where, instead of shaft collars, there were water-jetted hooks separated by $\frac{1}{2}$-inch spacers. 3D-printed cones on the outside of the hooks would center the rope, allowing for a wider collection area. The hooks were successful in capturing the frayed rope, so the same design would be used in the robot.

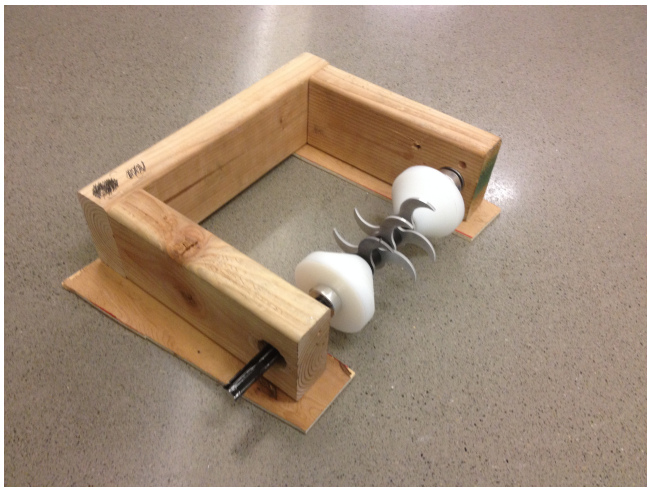

Figure 14: The original screw-and-bearing prototype was replaced by a cleaner, water-jetted prototype.

4 Design

After prototyping, the design team used Autodesk Inventor to begin creating models of the selected prototypes. These models were finalized and used for assembly.

4.1 Subteam Organization

In order to spend as much time as possible on the design of each subassembly, the design team was split into five subteams: hopper/indexer, shooter, climber, gear collector, and drive base. These groups each had a folder online in A360 where they could upload assemblies. The software would organize the assemblies into versions, leaving a record of all edits made. Mentors could also go on A360 and make comments on the assemblies. This allowed the teams to work efficiently. The previous year, Vault was the primary document sharing platform, but it was difficult to work with by comparison because it was fairly complicated. Unfortunately, A360 does not have the same "check out" features, so work could be overwritten, but this is not a large issue because A360 stores a record of previous designs. Furthermore, as long as files are uploaded at the end of each meeting, the number of overwritten changes remains fairly small, making it simple to remake the changes in the new file.

4.2 Master Robot Geometry

In order to keep the design more organized than last year, this year's design process began with creating a master robot geometry sketch in Autodesk Inventor. This sketch was included as a part in later assemblies in order to ensure that everyone had the same idea of what the overall robot looked like.

One of the largest challenges was the fuel collector. It had not been prototyped much, but it was desired to have some sort of horizontal bar pulling in

fuel by compressing it from the top. Early designs on the collector cut into the space on the hopper and did not reach out past the bumpers, making it difficult to collect fuel. Thus, it was chosen to make the collector a pulley that swung from vertical to horizontal in order to pull in fuel. This fuel would then feed into the hopper and conveyor system from the bottom.

There was also some difficulty with the placement of the climber. It was decided that the climber would pick the rope up off of the ground, so it was placed it underneath the gear collection and placement system. Together with the collector, this totaled two cuts into the drive base and bumpers, one on either side.

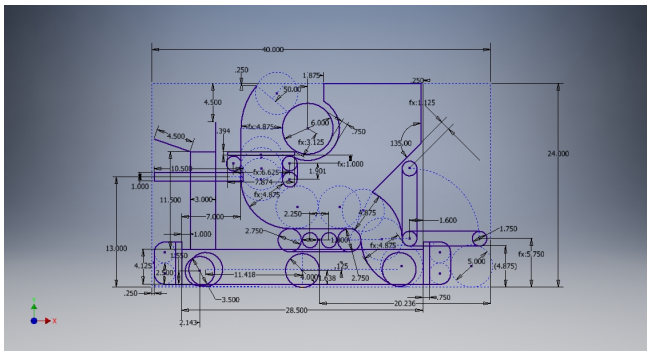

Figure 15: The master robot geometry displayed the most significant dimensions on the robot in a side view.

4.3 Drive Base

The goal of the drive base this year was to be as simple and efficient as possible. The architecture is a refinement of last year's drive base. Sheet metal joints were consolidated and unnecessary structure was removed. Unlike all previous robots, a cantilevered West Coast Drive allowed for easier wheel maintenance and access to internal electronics. The wheel axles were only supported from the inside of the frame and thus were exposed on the ends. To maintain simplicity, the frame was kept as thin as possible, being just $4\frac{1}{8}$ inches thick. At the beginning of the design process ground clearance was designed to be $\frac{1}{2}$ inch. However, manufacturing tolerances and CAD errors created an unacceptably low drive base that dragged on the ground and high-centered on zip ties. The axle geometry had to be re-worked to allow for an inch more of clearance.

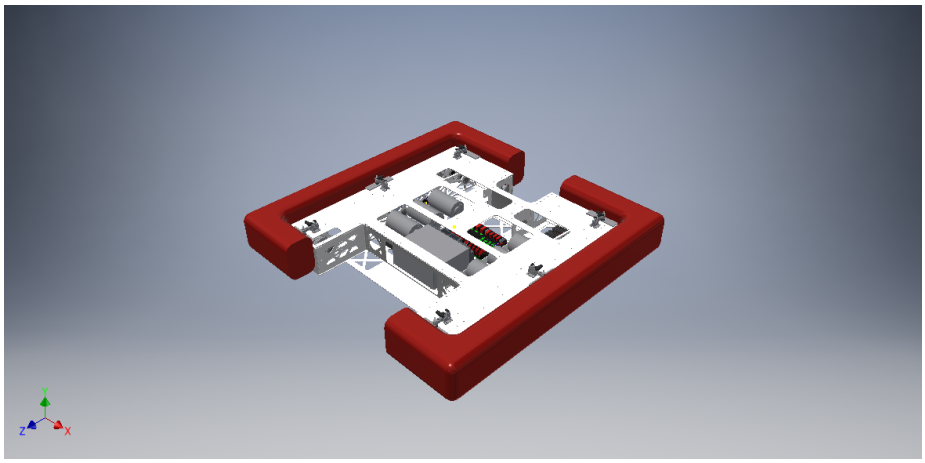

Figure 16: The drive base had two cut-outs: one for the fuel collector or floor gear collector and one for the climber.

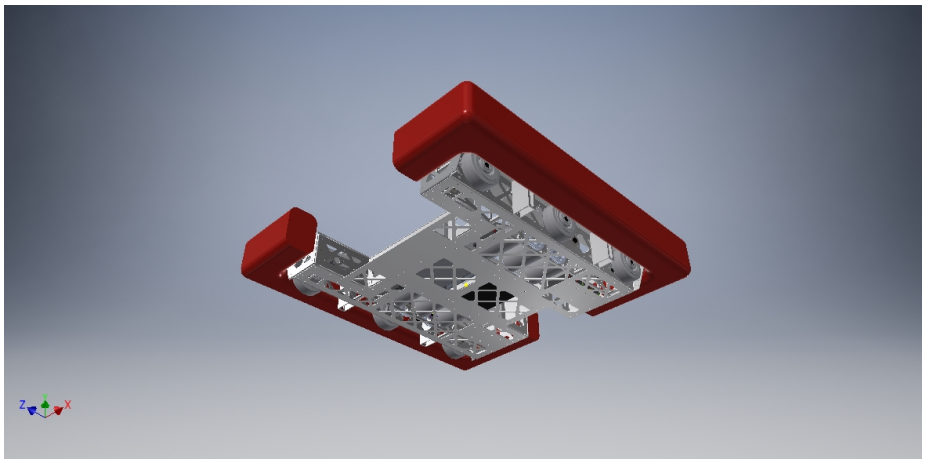

Figure 17: The drive base had six 4-inch Colson wheels powered by six CIMs.

4.4 Gear Collection and Placement

The gear folder was made with a front flap that moves forward to collect the gear. This was accomplished by using cams attached to a servo motor. When the servo motor is turned on, it drives the gear that rotates the cam forward, pushing the flap open. A spring is attached to the top of the front flap and secured to the top of the back plate and prevents the flap from moving too far forward, allowing it to come back when the gear is acquired. The front plates, back plates, and the cams were made out of polycarbonate, while the rest of the part was made out of aluminum.

However, an issue arose with the cams: when they were fully extended, they did not open the flap enough. Thus, the cam was lengthened and shifted down the side plate by two inches. Additionally, the shape of the original cam became

an oval, but this increased the required torque to move the front flap forward. In order to reduce the torque, the cam shape changed so that it resembled an egg. Once these changes were made, the cams were able to make the front flap extend out further.

Figure 18: The first iteration of the cam tabs were oval-shaped.

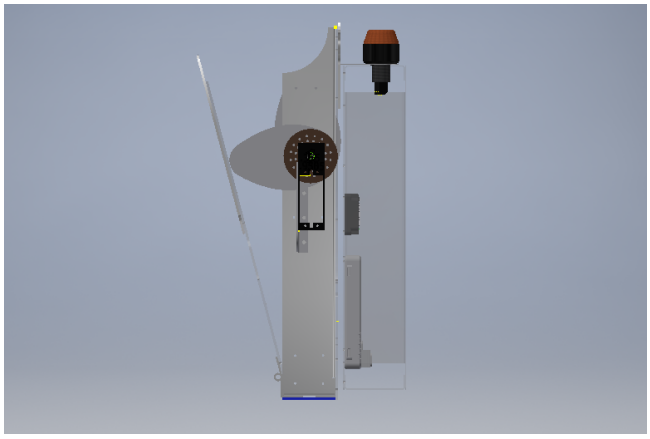

Figure 19: The cam tabs were updated to an egg shape in order to reduce torque.

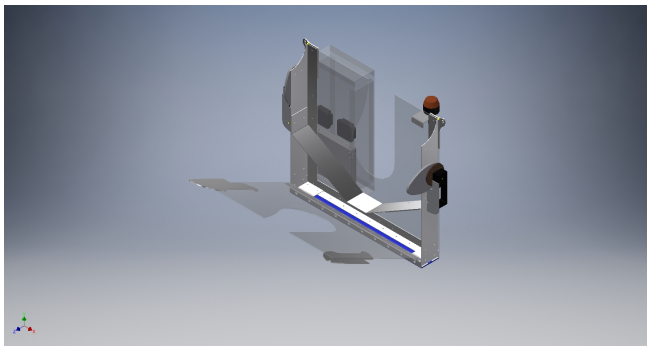

Figure 20: The complete CAD model of the gear collector included an attachment for electronics.

In the first competition, the gears would sometimes fall over the gear collector and into the hopper or go in sideways and get stuck, and the driver would have to spin the robot to shake them off. The gear would also rattle back in forth because there was so much extra space in the width of the gear folder. This allowed the gear to roll back and forth as the robot turned, which made it hard to line up with the spring. Multiple edits were required to fix these issues.

The first revision was to stop the gear from moving as the robot drove down the field. One possible solution was adding a standoff to either side of the inside of the front plate. When the front flap closed on a gear, the standoff would go on either side of the gear and keep it from moving around. The problems with this were that when the gear was dropped in, it could hit against the standoff and fall out. Moreover, when the front flap closes, the gear is not always guaranteed to be lined up, so the front flap could resist closing and break. Since the speed of the cams is slow and the driver closes it while driving, it would mean that the standoffs would have to line up while the gear is rocking back and forth within the gear folder. Instead, rubber was added onto the inside of the gear collector so that the gear would be flush with the inside and back plate, which would prevent it from moving.

Additionally, changing the angle of the inside plate was considered so that there would be a steeper slope, which would make it harder for the gear to roll back and forth. However, implementing this would require taking the gear folder apart, wasting time out of the bag. Furthermore, when the gear folder was tested with the added rubber, the gear no longer rattled, so changing the angles was unnecessary.

The other problem was that the gear would get stuck in the middle opening of the front and back plate of the gear folder. To solve this,the back and front plates could have been replaced with plates with narrower openings for the spring. However, if there was a narrow top, then there would be a steep angle that the spring would have to slide up against when the gear is being taken out, and that would make it hard for the human player. It would also be harder for the driver to line up with the hole with the spring. Furthermore, taking the front and back plate out would require taking apart the entire gear collector.

Instead, adding a flap or bristles on either side of the back plate was considered. This would theoretically prevent the gear from falling into the middle cutouts of the plates, but not block the spring. However, there was no read-

ily available material that could meet both requirements. After talking to the human player, it was decided that it was unnecessary to do any of these implementations, and instead line the robot up more accurately.

4.5 Fuel Collector

For the first design, it was planned to use a 1-inch square shaft with bearing holes cut into the square shaft, excluding the outside support bars, which hold the bearings in the most recent design. The square shafts were the main supporting pieces of the collector, which made it difficult for the bearings and shafts to be attached and compromised structural integrity.

The second design used $\frac{3}{4}$-inch shafts to cut weight from the collector. To support the bearings and bring the forces away from the structurally weaker and smaller square shafts, $\frac{1}{8}$-inch-thick support plates were designed to go on the sides of the collector. The width was also increased to 17 inches of effective collection area. Four brackets were added on each side to connect the $\frac{3}{4}$ square shafts, the 1983 cross plate, and the bearing support bars; these would be riveted together.

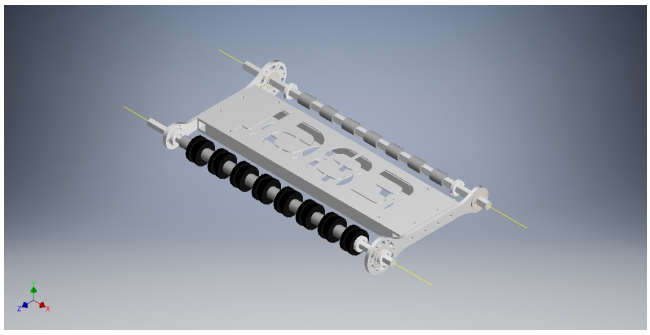

Figure 21: The second iteration collector had many structural changes.

The third and final iteration of the collector changed where the 1983 cross plate connected, opting for only two brackets which connect the short $\frac{3}{4}$ inch square shaft, to the long square shaft. The rivet holes moved into the short $\frac{3}{4}$ inch square shaft and the long square shaft to reduce part count and increase stability. The front bearing support circle was decreased in size to make sure fuel was not blocked by anything when being pulled in from the side. The holes were also spaced from the square shafts to give the pulleys more room.

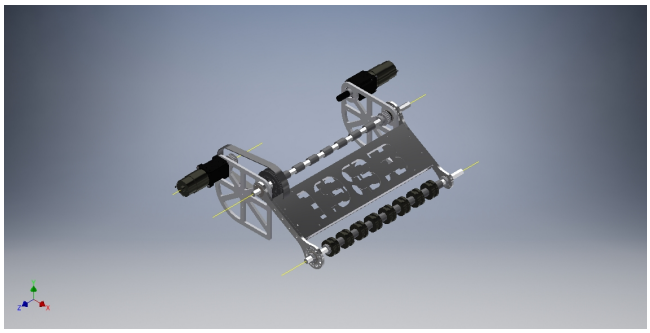

Figure 22: The final collector could easily collect fuel off the floor.

4.6 Hopper

The hopper design fit the space left over from the other assemblies. Originally, there was a fuel collector, indexer, turret, and gear collector to work around. Thus, polycarbonate walls were placed around the outside of the collector and indexer, with holes to allow for the turret to spin and shoot. Originally these walls held fuel from falling into the turret, but they were removed because they blocked the fuel intake. Eventually the fuel intake was also removed because there was not enough time to program the collector and fix its dead zones in between competitions. However, the ramp on the hopper remained raised off the floor of the drive base so that fuel falling was more likely to stay on the conveyor belts and easily move to the turret. An agitator run by a Denso window motor was also added in order to move balls into the indexer more quickly. This changed the overall shape of the hopper; curved walls were added so that the fuel flow became more efficient. With the first round agitator, the turret was able to fire at about 3 balls per second.

4.7 Indexer

Robot designs from 2012 Rebound Rumble were integrated. While looking at the team's robot and other robots, it was determined that having an indexer and stopper would be the most effective technique. The design was based around the principle that if one ball could be shot on target, we could line up to ensure the rest would go into the target as well, which would be most efficient.

4.8 Shooter

Through prototyping, it was discovered that the best option for the flywheel was a single 4-inch Colson wheel. The wheel by itself does not have enough angular momentum, so four steel weight rings were also added so it would lose a smaller percent of angular velocity when it loses energy from the balls going through. The ramp is made from two aluminum rails, which are 2 inches apart. Using geometry, it was determined that the rails' distance apart affects the compression on the ball, so it was adjusted their radii to give $\frac{3}{8}$ inches of compression, since that is what appeared to be most optimal during prototyping. The angle the robot is shooting at is manually adjustable, but static during the game. It can change to be anywhere between 50 and 57 degrees. The team is using a 775 Pro

motor to power the flywheel, directly driving the shaft. The whole shooter is attached to a lazy Susan which has a belt wrapped around it so the rotation is powered and controlled. The turret itself is powered through a NeveRest motor.

4.9 Climber

The final climber design incorporated the best elements of the previous climber prototypes as it merged the frame and housing of the Velcro prototype with the fray grabbing hooks form the final prototype. Mounting the housing of the climber as part of the drive base frame of the robot gives the part increased strength as the rest of the drive base will have force distributed across the interior frame. Dual 775 pros geared with an 100 to 1 gear ratio through a VersaPlanetary gearbox give the climber the power to lift the full weight of the robot. The ratchet and pawl system allows the robot to stay in place after climbing to the top of the rope. The climber uses chain to transfer force from the gearbox to the shaft.

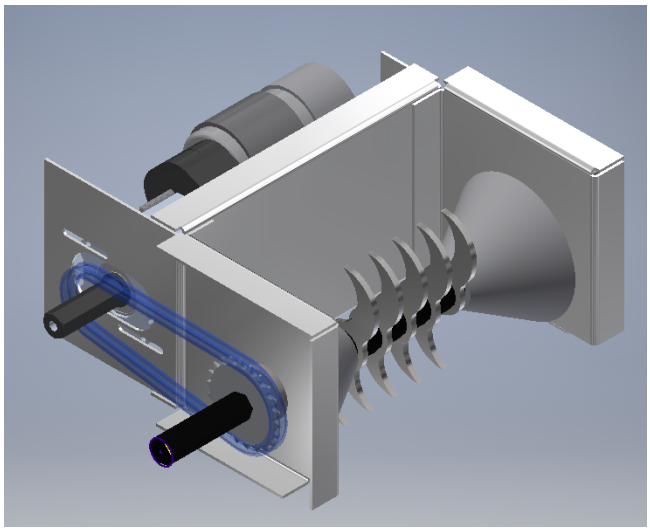

Figure 23: The final climber assembly included the water-jetted hooks and centering cones.

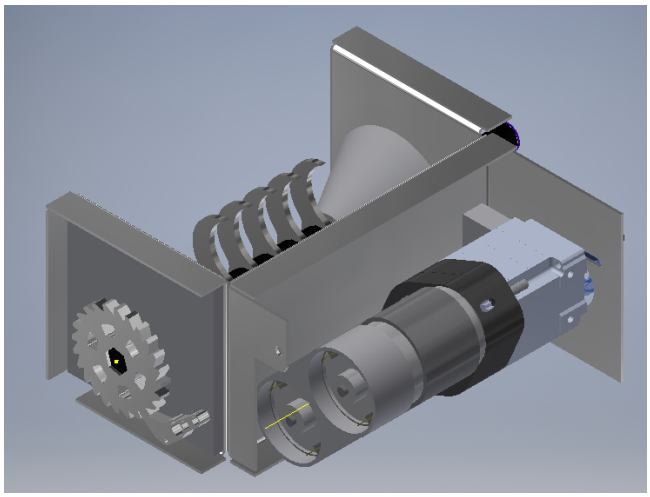

Figure 24: Behind the climber, a VersaPlanetary gearbox connected to two RS-775 pro motors drove the climber via chains. The ratchet-and-pawl system sits on the side.

5 Assembly

5.1 Drive Base

The drive base is built entirely of $\frac{1}{16}$-inch aluminum 6061, cut on a waterjet and bent on a finger break. There are doubler plates added to the $\frac{1}{16}$-inch aluminum where extra strength was necessary, such as at the climber. Standard rivets are used around all the edges. The corners and the weight-bearing parts, such as the climber, use high-strength steel core rivets. When the drive base was first built for the practice bot, there were immediately some problems in the geometry. With such a low ground clearance and little cross-sectional strength, the robot was almost scraping on the ground already. This was causing severe control issues on the field. These ground clearance problems were going to be exacerbated when more structure was added on top of the drive base, forcing the already floppy belly pan into the field carpet. To counteract this, structural metal tubing was added on the horizontal plane to provide support between each side. Angle pieces across the bottom were also added to both support the battery strap and keep the belly pan from sagging.

The assembly procedure for both drive bases was the same. The motor plates with CIMcoders were assembled in tandem with the $\frac{1}{16}$-inch plate drive base frame, then axles were put through, and the standoffs were bolted together. The wheels were put on next, and the electrical team was able to assemble their systems inside the frame. The last part to go on was the top plate, and then the standalone drive base was completely wired. The modular systems were added on top.

5.2 Gear Collection and Placement

The sides of the gear folder were attached with rivets to the bottom plate and an angle bracket. Then, the back plate was riveted to the side plate and the inside plate was riveted to both the side plate and the back plate by an angle bracket. A piano hinge was attached to an angle bracket on the front, and the front plate was attached to the hinge.

The first issue encountered with the assembly was that the two side plates did not line up flush with the bottom, so they had to be filed down. All other parts lined up well, but when a camera needed to be installed on the inside of the gear folder, there was nowhere to put it. Placing the camera in the middle of the gear folder was preferable for vision, but it was hard to do that because the camera support was too large to go on the bottom without the camera lens being obstructed by the piano hinge. Additionally, it was desired to have the camera support mounted to the bottom of the inside plate, but there was not room for it to be attached because of a button which activated a sensor to tell whether the gear was there or not.

It was deemed necessary to re-drill the hole for the button and move it back further. This caused a problem because the button was no longer centered, and the gear would not be able to press it down when acquired. To fix this, a thin polycarbonate piece was added to the side of the inside plate that made the area to be able to push down the button larger.

After implementing this, work was able to be done on the attachment of the camera and support. An L-bracket was attached to the bottom of the inside plate, to which the camera mount was attached. Then, a hole was cut in the polycarbonate of the front plate and the piano hinge so that there were no obstructions for the camera lens.

5.3 Fuel Collector

Assembly of the collector was a much more difficult task than we had anticipated. The pulleys used on the collector, as well as on the majority of the robot, were polycarbonate circles cut on a water jet. Although the water jet is a powerful tool, every polycarbonate piece had to be broached to allow the $\frac{1}{2}$-inch hex shaft to fit. The sides of the collector are made out of $\frac{1}{4}$-inch aluminum to provide vertical support, with square shaft providing horizontal support. After putting the pulleys on the shafts, the side pieces were put on with the square shafts. This was all held together with clamps, as rivets were not yet in. Before rivets were put in, the polyurethane tubing needed to be cut and attached as it would be nearly impossible to get the on after the part was put together. Once the rivets were in, construction of the piece that would mount and integrate into the hopper could start. The mounting plates were also made out of $\frac{1}{4}$-inch aluminum to create stability in the part. The two 775 motors used to power the collector needed to be installed before the plates were put in because they would be more difficult to attach once assembled. The gear box for the wheels to push the fuel into the hopper was put on next, with the wheels and shaft being put on after. Now the collector could be attached, the mounting plates put on, and the whole assembly riveted together. Once the collector was done, it was riveted to the drive base and the frame. Finally, the timing belts were put on to operate the collector.

5.4 Indexer

As the assembly of the indexer began several problems arose. The first major issue was that there was no tolerance added to the polycarbonate pulleys, so they were hard to put on the hex shaft, prolonging assembly time. The next issue was finding the correct spacing, as the foam stars used to push the fuel squeezed together more than what was expected. This in return threw off the sizing of the spacers. If it was too loose, the polycord belts would slip between the pulley. If the spacing was too large, then the side panels would not fit together. The next issue was with putting the turret onto the indexer. There were several problems that occurred. There was not an exact belt that could easily be slipped over the lazy Susan. This problem was fixed by manufacturing a new one by cutting and gluing the belt to it. The lazy Susan also could not be mounted onto both the turret and indexer. As a solution, holes had to be drilled into the indexer so that it could be mounted to the turret after the lazy Susan was mounted to the indexer. The turret would also run into the standoffs of the belt that went around the turret so it did not have 180 degrees of motion. This was solved by shortening the stand offs. The issue then arose that the belts had the possibility to ride over the stand off, so a plate was put on top to keep everything contained.

5.5 Shooter

The assembly of the shooter was very informational for the practice bot because it revealed that taking off the shaft that holds the flywheel to make adjustments is a tedious and time consuming task. The solution was to add a motor replacement plate, which is a small plate to attach the motor to. The motor replacement plate is then attached to the side plate, so it can be taken off easily. This frees up the flywheel shaft to be taken off. Another thing it revealed was that when the rails for the ramp are too close together, the fuel can easily become off-center. The solution was to change their distance from each other from 1 inch to 2 inches, so there is a compressive force as well as a force pushing it towards the middle.

5.6 Climber

When the climber was attached to the drive base, two problems occurred. First, the motor mount would bend toward the direction of the climber axle. This was solved by putting a metal piece between the flange of the motor mount face to the back plate of the climber. This would keep the motor mount face perpendicular to the climber. The second problem was, when the climber was tested, the chain would skip on the sprockets. This was solved with the use of a spring and chain tensioner to keep the chain as much in contact with the sprocket as possible.

6 Performance

6.1 Drive Base

Once getting over the initial hurdle of scraping on the ground, the drive base performed well. With the single reduction from the 6 CIMs to the wheels, the

team has a simple and reliable system for power delivery and movement. The calculated speed, accounting for inefficiency in the drive train is 13.8 fps, with an acceleration time of 1.2 seconds to the top speed. The robot was able to go through a full competition without a single mechanical issues on the drive base.

6.2 Gear Collection and Placement

At the team's first competition (Auburn Mountainview), the gear collector worked very efficiently, the exact way it was designed to. According to the team's human player, it was easy to put in gears from several different places at the retrieval zone, rather than having to spend time lining the robot up in order to retrieve gears. Though the cams were slow with going up and down, they worked efficiently because the operator could put down the front of the gear folder while the driver moved the robot. The gears were easy to line up and put on the spring, and the robot could put in about 3-4 gear cycles by the end of the competition.

The main problem with the gear collector was that gears sometimes would go into the hopper, or they would go in sideway and get stuck, and the driver would have to spin the robot to get the gear unstuck. Additionally, the gear would rattle back in forth because there was so much extra space in the width of the gear folder. The gear had a lot of movement as the robot drove up and down the field, which made it difficult to line up with the spring.

6.3 Fuel Collector

For the first competition, the fuel collector was not functional because the programmers ran out of time to write code for it. It was also ineffective because fuel would become stuck in between the floor of the hopper and the top wheels of the collector. Consequently, it was removed for the Central Washington competition, focus being placed on an efficient, top-feeding hopper instead of the flexibility the fuel collector could offer.

6.4 Hopper

Over time, multiple iterations of the hopper were built, but a large number lacked in-depth testing because the shooter was not functional. Thus, many of the changes were for structural support. However, with the most recent iteration various fuel agitators were tested in order to get the hopper running as quickly as possible. One of the largest issues was that the ramp on the end of the indexer would push the fuel up as the agitator pushed the fuel around, causing a jam. Thus, the ramp was removed and replaced with a circular wall. With this wall, the shooter was able to be fed and shoot at about 3 balls per second.

6.5 Shooter

Preliminary tests on the shooter have shown that the shooter has around a two foot spread from left to right because, at the time, the power going to the flywheel had no programming on it, so it was simply powered to the motor even though it is crucial that the same amount of force is applied to each ball in order

to be accurate. In later competitions, when the gear auto hit, the shooter had about a 10-30% accuracy, which was sufficient for tie-breaker points.

6.6 Climber

The robot was able to climb consistently. Drivers were able to line the robot up with the rope on the ground and the frayed ends of the rope were caught by the hooks every time, allowing the robot to ascend without much problems. The torque from the 1:100 gear ratio was far more than was needed in competition. As a result, the robot took almost 10 seconds to climb each time, but did not have any trouble ascending.